SONY

3-860-000-**11**(1)

Mini Hi-Fi Component System

Operating Instructions **EN**

COMPACT disc DIGITAL AUDIO

MHC-GR5

©1997 by Sony Corporation

WARNING

To prevent fire or shock hazard, do not expose the unit to rain or moisture.

To avoid electrical shock, do not open the cabinet. Refer servicing to qualified personnel only.

Do not install the appliance in a confined space, such as a bookcase or built-in cabinet.

Laser component in this product is capable of emitting radiation exceeding the limit for Class 1.

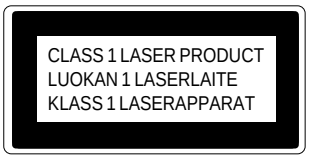

This appliance is classified as a CLASS 1 LASER product. The CLASS 1 LASER PRODUCT MARKING is located on the rear exterior.

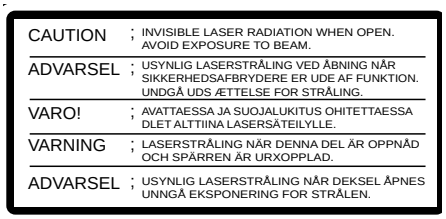

This caution label is located inside the unit.

Welcome!

Thank you for purchasing the Sony Mini Hi-Fi Component System. This series is packed with fun features. Here are just a few:

- DBFB (Dynamic Bass Feedback) system that boosts low frequency range audio provide deep, powerful bass sound
- A preset feature that lets you store and recall up to 40 of your favourite radio stations
- An amplifier that lets you adjust the audio quality to fit a variety of music types and environments
- A timer that lets you set the CD player, tape player or radio to turn on and off whenever you want
- A dual tape deck that lets you record from the radio, CD player or from the other tape deck and relay play from both decks
- A remote that lets you control your system from your seat
- A loop play feature that lets you play a CD with sound effect like sampler play
- The MHC-GR5 consists of following things
  – Main unit : HCD-RX50
  – Speaker system : SS-L50H

Table of Contents

Chapter 1: Setting Up

Connecting the Stereo 4
Inserting the Batteries 6
Setting the Clock 6

Chapter 2: the CD Player

Playing CDs (normal play) 7
Playing Tracks in Random Order (shuffle play) 8
Playing Tracks in the Desired Order (program play) 8
Playing Tracks Repeatedly (repeat play) 9
Playing Tracks: Repeating a Specified Portion (loop play) 9

Chapter 3: the Radio

Listening to the Radio 10
Presetting Radio Stations 11
Playing Preset Radio Stations 11

Chapter 4: the Tape Player

Playing a Tape 12
Recording a CD 13
Recording a CD: Selecting Tape Length Automatically (tape select edit) 13
Recording a CD: Specifying Tape Length (time edit) 14
Recording a CD: Specifying Track Order (program edit) 15
Recording From the Radio 15
Recording From Another Tape (dubbing) 16

Chapter 5: Sound Adjustment

Adjusting the Sound 17
Selecting the Audio Emphasis 17
Adjusting the Audio Emphasis 18
Making a Personal Audio Emphasis File (personal file) 18

Chapter 6: Additional Features

Falling Asleep to Music 19
Waking Up to Music 19
Timer-Recording Radio Programs 20
Microphone Mixing 21
Karaoke: Singing Along 21
Connecting Optional Equipment 22

For Your Information

Precautions 23
Troubleshooting Guide 23
Maintenance 24
Specifications 25
Index to Parts and Controls 26

Index 27

Chapter 1: Setting Up

Connecting the Stereo

Inserting the Batteries

Setting the Clock

Connecting the Stereo

Use the illustrations below to connect your stereo.
If you want to connect any optional components to the stereo, see “Connecting Optional Equipment” in Chapter 6.

STEP 1 Connecting the Speakers

To connect the front speakers
Connect the right front speaker to the SPEAKER R connectors and the left front speaker to the SPEAKER L connectors with the red cords to ⊕ and the black cords to ⊖.

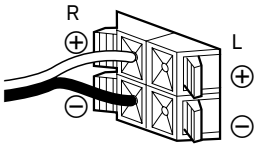

STEP 2 Connecting the Antennas

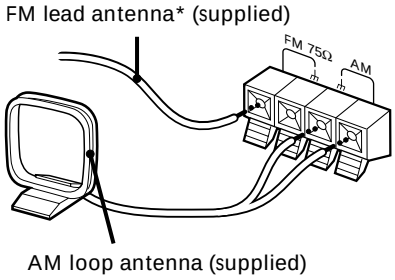

* Note: Extend it horizontally

AM loop antenna connection
Connect the supplied loop antenna to the AM and the ⏚ terminals.

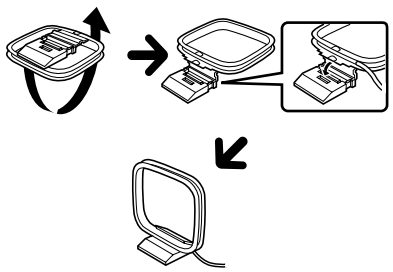

To improve the FM reception
Connect an external FM antenna to the FM 75 Ω and ⏚ terminals, using a 75-ohm coaxial cable.

Important
Ground the external antenna from ⏚ terminal against lightning with the screw clamp. To prevent a gas explosion, do not connect the ground wire to a gas pipe.

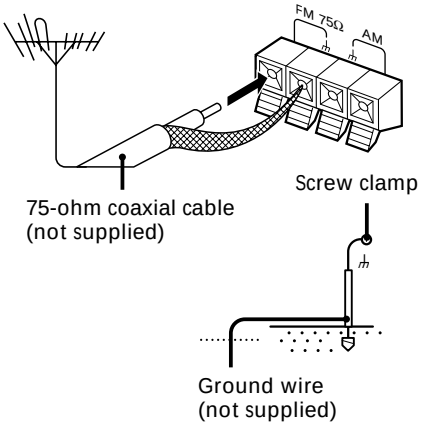

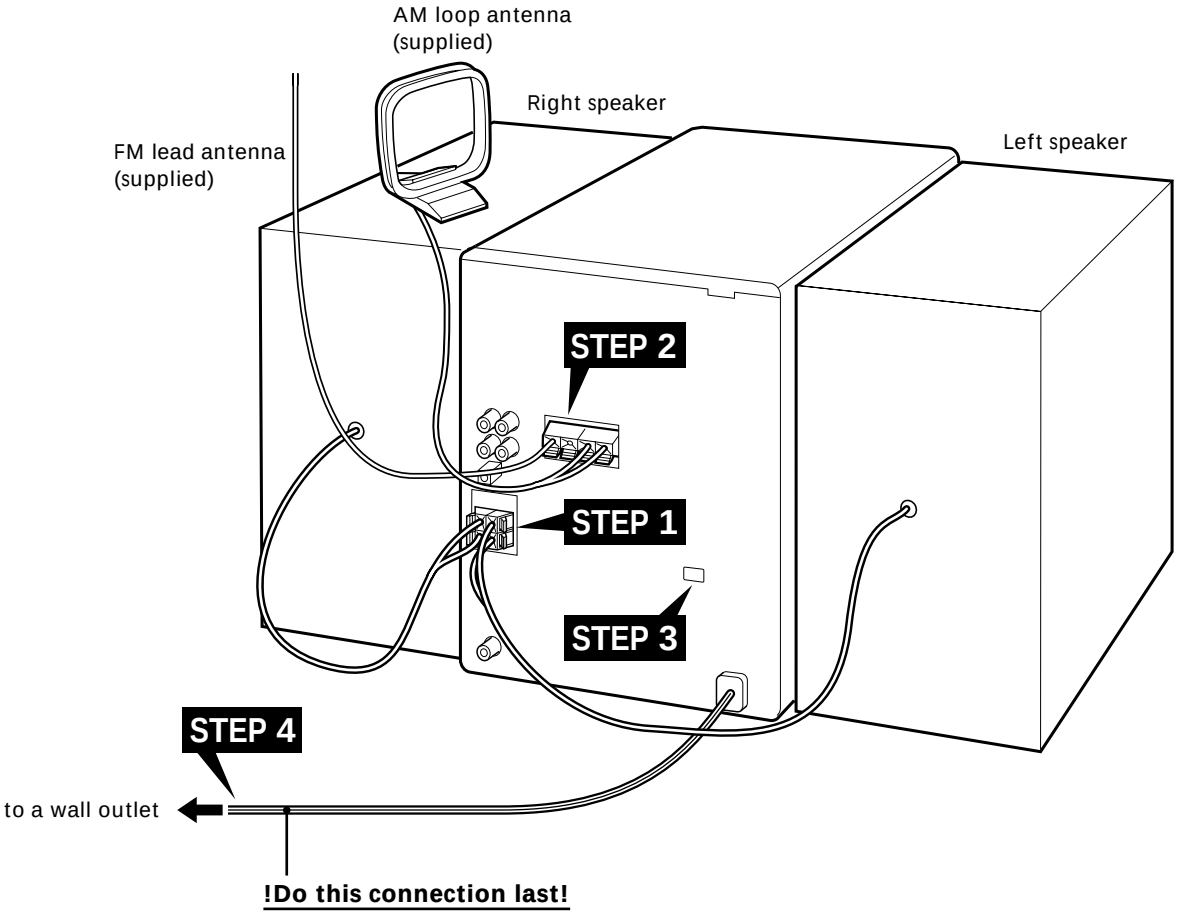

To improve the AM reception

After you connect the AM antenna, connect a 6- to 15-meter insulated wire to the AM terminal. Connect the ⏚ terminal to earth.

Important

Ground the external antenna against lightning from the ⏚ terminal. To prevent a gas explosion, do not connect the ground wire to a gas pipe.

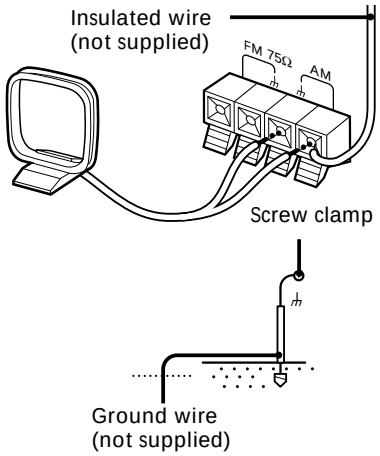

STEP 3 Adjusting the Operating Voltage (for customers outside Malaysia and Singapore)

Before connecting the power, set VOLTAGE SELECTOR to the position of the local power line voltage.

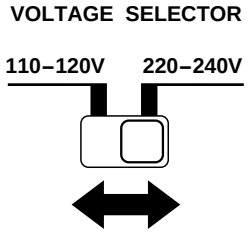

STEP 4 Connecting the Power

Connect the AC Power cord to a wall outlet after you have made all the above connections.

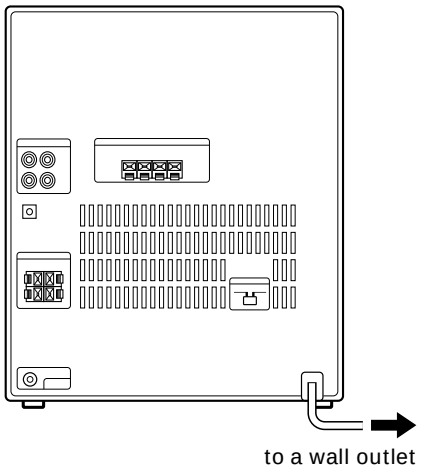

continue to next page →

→ continued

Plug Adapter

If the plug of this unit does not fit your wall outlet, attach the supplied adapter on to the plug.

Inserting the Batteries

Install two R6 (size AA) batteries in the supplied remote for remote control.

1 Open the lid.

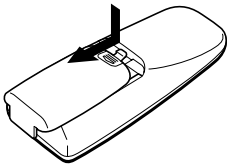

2 Insert two R6 (size AA) batteries. Match the + and – indications to the diagram in the battery compartment.

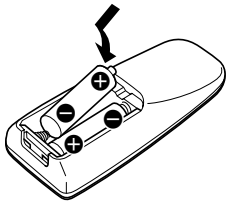

3 Close the lid.

Battery life

You can expect the remote to operate for about six months (using Sony SUM-3 (NS) batteries) before the batteries run down. When the batteries no longer operate the remote, replace all the batteries with new ones.

To avoid battery leakage

If you are not going to use the remote for a long time, remove the batteries to avoid damage caused by corrosion from battery leakage.

Setting the Clock

The built-in clock shows the time in the display even if the power is off. You need to set the clock to utilize the timer-activated features of your stereo system.
Use the buttons on the unit to do this operation.

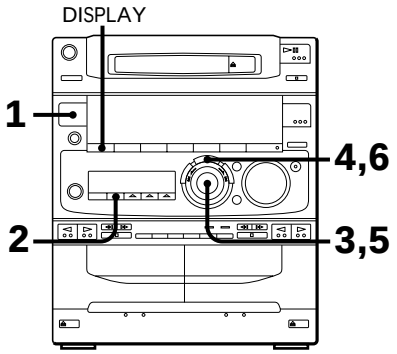

1 Press TIMER.

2 Press CLOCK SET.
The ″AM″ and hour indication begin flashing.

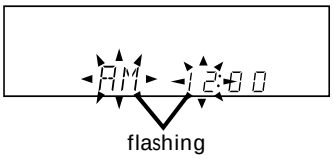

3 Set the current hour by turning the jog dial until the correct hour appears.

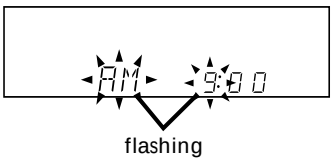

4 Press ENTER / NEXT.
The minutes indication begins flashing.

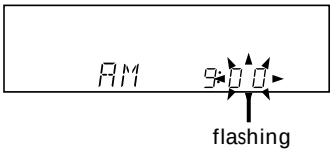

5 Set the current minute by turning the jog dial until the correct minute appears.

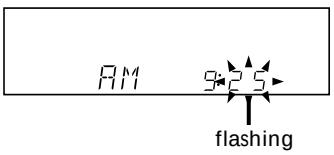

6 Press ENTER / NEXT.
The clock starts running and the upper dot flashes. Use the time signal to set the clock accurately.
The upper dot flashes for the first half of a minute (0 to 29 seconds), and the lower dot flashes for the last half of a minute (30 to 59 seconds).

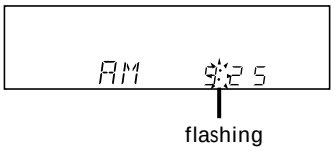

To check the time

Press DISPLAY a few times.
The current time is displayed for eight seconds.

To correct the clock setting

Repeat steps 1 through 6.

Chapter 2: the CD Player

Playing CDs (normal play)

Playing Tracks in Random Order (shuffle play)

Playing Tracks in the Desired Order (program play)

Playing Tracks Repeatedly (repeat play)

Playing Tracks: Repeating a Specified Portion (loop play)

Playing CDs (normal play)

You can play CDs in four modes: normal, shuffle, program and repeat. The mode decides which tracks (songs) you will listen to, in which order and whether or not they will repeat.
You can play 12 cm and 8 cm CDs. If the CD is supplied with an adaptor, remove it before playing the CD.
Before you play the CD, decrease the sound level by turning the VOLUME control counterclockwise, to prevent damage to the speakers.
Use the buttons both on the unit and the remote to do this operation.

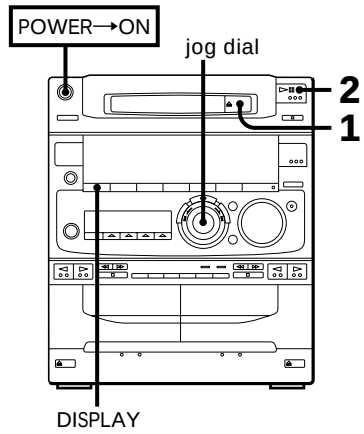

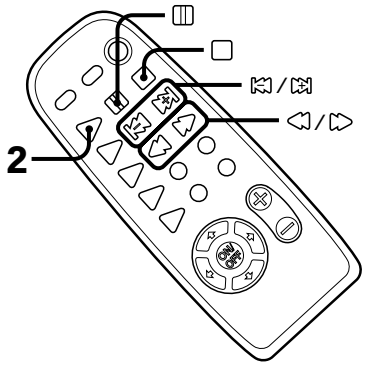

1 Press ⏏ OPEN / CLOSE and place a CD on the disc tray.

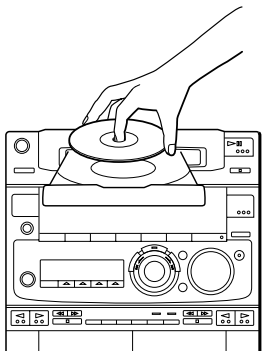

2 Press ⊳II (or CD ▷ on the remote). The disc tray closes and play starts.

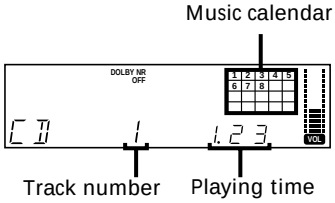

To	Press
Stop play	■ (□ *1)
Pause	⊳II (▯ *1)
Resume play	⊳II (CD ▷ *1 or ▯ *1)
Go forward to another track	During play or pause, rotate the jog dial clockwise. Release when you reach the track you desire. Or use AMS*2 ⏭ on the remote.
Go back to a previous track	During play or pause, rotate the jog dial counterclockwise. Release when you reach the track you desire. Or use AMS*2 ⏮ on the remote.

*1 Remote
*2 Automatic Music Sensor

To find a point in a track

You can find a particular point in a track while the track is playing or while it's in pause mode.
Use the buttons on the remote to operate this feature.

To	Press
Go forward quickly in a track	⏩ on the remote and release it at the desired point.
Go backwards quickly in a track	⏪ on the remote and release it at the desired point.
Search quickly without listening	▯, then press ⏪ or ⏩ on the remote. Press CD ▷ or ▯ again at the desired point.

continue to next page →

EN
7

→ continued

To check the remaining time during playback

Press DISPLAY repeatedly.
Each time you press the button, the display changes as follows:

→ Playing time on the current track
↓
Remaining time on the current track
↓
Remaining time on the CD
↓
Clock display (for eight seconds)
↓
Effect (or P FILE) name or "EFFECT ON (OFF)"

To check the total playing time and the total number of tracks

Press DISPLAY in stop mode. When you press DISPLAY again, the display shows the clock display for eight seconds and returns to the previous indication.

Notes

- You cannot check the total playing time during program play.
- The total playing time and number of tracks also appear in the display when you press ⏏ OPEN / CLOSE to close the disc tray.
- "--.--" appears in the display when the total playing time is 100 minutes or more.

One Touch Play feature

Press ⊳II on the CD player (or CD ▷ on the remote) when the power is off. When a CD is in the player, you will be able to start listening to the CD without pressing any other buttons.

The Music Calendar Display

This display lights according to the number of tracks on the CD. As each track is played, the corresponding number disappears. Tracks numbered in excess of 20 are not displayed.

Automatic Source Selection

If the CD player has been in the normal play mode, you can select the CD player just by pressing ⊳II (or CD ▷ on the remote).
If the CD player has been in the program play or the shuffle play mode, only ⊳II can be used for this function.

If there is no CD in the player

"CD no dISC" appears in the display.
Press ⊳II (or CD ▷ on the remote) while the indication is on, then the disc tray will open automatically.

Playing Tracks in Random Order (shuffle play)

You can play all the tracks on the CD in random order.
Use the buttons on the unit to do this operation.

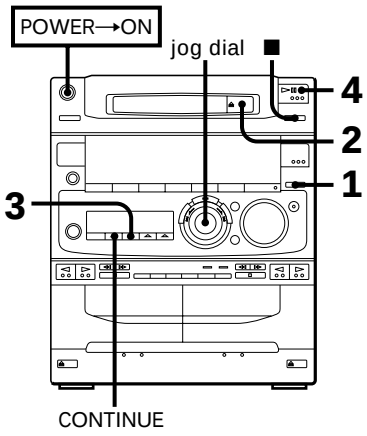

1 Press FUNCTION repeatedly until "CD" appears in the display.

2 Press ⏏ OPEN / CLOSE and place a CD on the disc tray. Then, press ⏏ OPEN / CLOSE again to close the disc tray.

3 Press SHUFFLE.
"SHUFFLE" appears in the display.

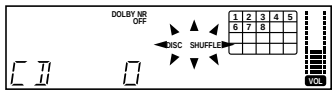

4 Press ⊳II.
" " appears and then all the tracks play in random order.

To stop shuffle play

Press ■ on the CD player.

To cancel shuffle play

Press CONTINUE so that "SHUFFLE" disappears from the display. The tracks continue playing in their original order.

To skip an undesired track

Turn the jog dial clockwise (or press ⏭ on the remote).

Playing Tracks in the Desired Order (program play)

You can program up to 32 tracks to play in any order you choose.

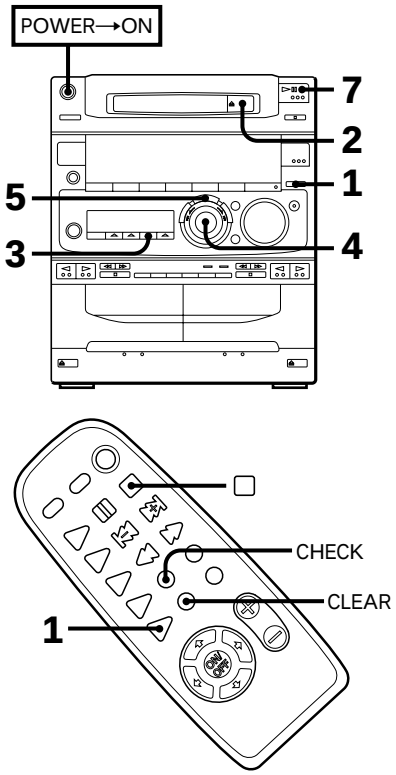

1 Press FUNCTION repeatedly until "CD" appears in the display.

2 Press ⏏ OPEN / CLOSE and place a CD on the disc tray. Then, press ⏏ OPEN / CLOSE again to close the disc tray.

3 Press PROGRAM.
"PROGRAM" and "DISC" appear in the display.

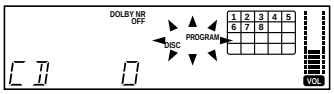

4 Turn the jog dial to choose a track.
The track number and the total playing time appear in the display.

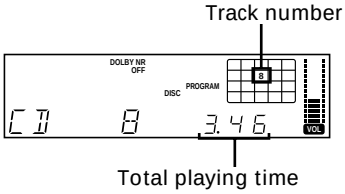

5 Press ENTER / NEXT.
The chosen track number lights up in the music calendar. If the track number and the total playing time disappear before you press ENTER / NEXT, go back to step 4.

6 Repeat steps 4 and 5 to program the remaining tracks you want to play in the order you want them to play.

7 Press ▷II.
All the tracks play in the order you choose.

To	Press
Check the program	CHECK on the remote repeatedly*1
Program a pause	II on the remote*2
Stop play	■ (□ on the remote)
Cancel program play	CONTINUE*3
Erase a track from the end	CLEAR on the remote in stop mode
Erase a specific track	CHECK on the remote repeatedly so that the number of the track lights up, and press CLEAR on the remote
Erase the entire program	■ (□ on the remote) once in stop mode or twice while playing

*1 After the last track appeared "CHECK END" appears in the display.
*2 "P" appears and the total playing time is reset to 0.00.
*3 The program is erased.

To change the order of programmed tracks

To change the order, erase the entire program and create a new one.

Notes

- The program you made remains in the CD player even after it has been played back. Press ▷II to play the same program again.
- If "--.--" appears instead of the total playing time during programming, this means:
  – you have programmed a track number which exceeds 20, or
  – the total playing time has exceeded 100 minutes.

Playing Tracks Repeatedly (repeat play)

You can choose between two different repeat play modes. One repeats all the tracks in the current play mode; the other repeats a single track.
Use the buttons on the unit to do this operation.

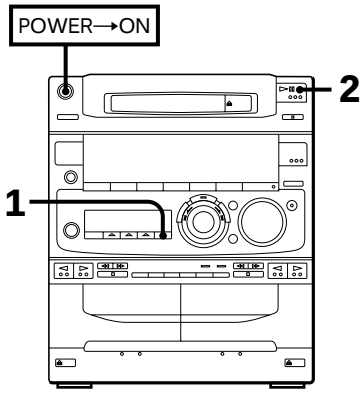

Repeating all the tracks

1 Press REPEAT once so that "REPEAT" appears in the display.

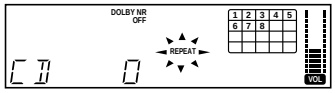

2 Press ▷II.

Repeating a single track (in normal play mode only)

Press REPEAT repeatedly while playing the desired track until "REPEAT 1" appears in the display.

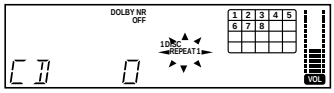

To cancel repeat play

Press REPEAT so that "REPEAT" or "REPEAT 1" disappears from the display.

Playing Tracks: Repeating a Specified Portion (loop play)

You can use the loop function to record from a CD to a tape with the sampler play. Use the buttons both on the unit and remote to do this operation.

EXAMPLE

Original song:
"Hey, come on everybody!"

When you use the loop function:
"Hey, come come come come come on everybody!"

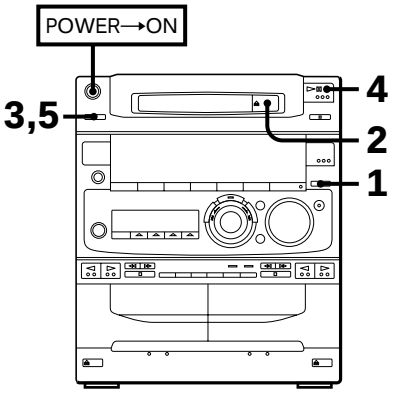

1 Press FUNCTION repeatedly until "CD" appears in the display.

2 Press ⏏ OPEN / CLOSE and place a CD. Then, press ⏏ OPEN / CLOSE again to close the disc tray.

3 Press LOOP repeatedly to select NORMAL or RHYTHM (as for NORMAL and RHYTHM, see "What is the difference between NORMAL and RHYTHM?" for details).
NORMAL or RHYTHM has five modes respectively, depending on the interval you want. The display changes as follows:

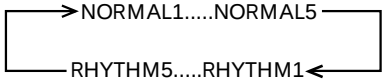

The interval (about 0.25 to 1.00 second) becomes longer as the number gets bigger.

4 Press ▷II.

5 Press and hold down LOOP when a portion you want to repeat is played and release when you want to stop repeating it.

What is the difference between NORMAL and RHYTHM?

There is a difference between NORMAL and RHYTHM in restarting point of normal play when the loop effect ends.
Select NORMAL or RHYTHM while stop playing or pause playing.

NORMAL
Normal CD play resumes from the same point as you have started the loop play when you release LOOP button.

RHYTHM
The portion over-ridden by the loop effect will be skipped and then normal play resumes.

Chapter 3: the Radio

Listening to the Radio

Presetting Radio Stations

Playing Preset Radio Stations

Listening to the Radio

When you want to play a radio program, you can have the tuner automatically scan the radio frequencies and tune in the stations with clear signals. This feature saves you time in searching for stations with clear signals. However, stations with weak signals may be skipped by automatic tuning. Manually tune in the ones skipped by automatic tuning.

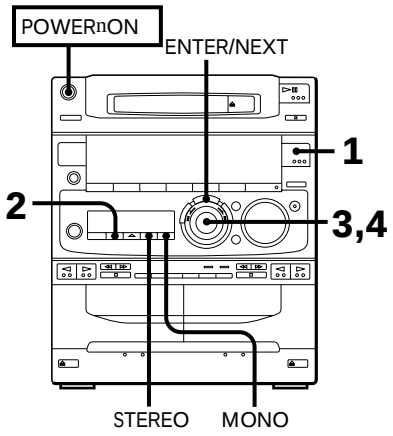

1 Press TUNER/BAND repeatedly until the band you want appears in the display.
As you press TUNER/BAND, the band changes as follows:

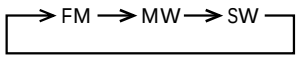

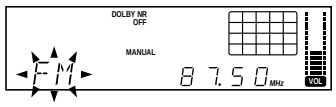

2 Press TUNING MODE repeatedly until "AUTO" appears in the display.

3 Turn the jog dial clockwise to scan a higher frequency station. To tune in a lower frequency station, turn the jog dial counterclockwise.
The tuner starts scanning radio frequencies, and stops automatically when it finds a clear station.
"TUNED" appears in the display.
"STEREO" also appears if the tuned FM station is broadcasting in stereo.

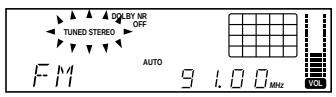

4 If you do not want to listen to the station selected, turn the jog dial again to restart the scan.

When the desired station is not tuned in

Automatic tuning may skip stations with a weak signals. Tune in the station manually.

1 Press TUNING MODE repeatedly until "MANUAL" appears in the display.
2 Keep turning the jog dial until the desired station is tuned in.

To improve MW/SW (AM) broadcast reception

Reorient the supplied AM loop antenna for MW/SW (AM).

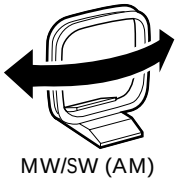

To change the MW (AM) tuning interval

The MW (AM) tuning interval is preset to 9 kHz (some models are preset to 10 kHz) in the factory. If you need to change the interval, do as follows:

1 Turn on the power.
2 Change the band to MW (AM).
3 Turn off the power.
4 Turn the power back on while pressing ENTER/NEXT.

After changing the MW (AM) tuning interval, reset the preset radio stations. To reset the interval to the factory setting, follow the same procedure.

When an FM program is not clear to receive

Press MONO so that "MONO" appears in the display. There will be no stereo effect, but the reception will improve. Press STEREO to restore the stereo effect.

One Touch Play feature

Press TUNER/BAND when the power is off. You can listen to the last received station without pressing any other buttons.

Automatic Source Selection

If you press TUNER/BAND while you are listening to other sound source, the tuner is selected and the last received station plays automatically.

Presetting Radio Stations

You can store radio frequencies in the tuner's memory to tune in your favourite stations quickly. You can preset up to 20 FM stations, 10 MW stations and 10 SW stations in any order.
Use the buttons on the unit for presetting stations.

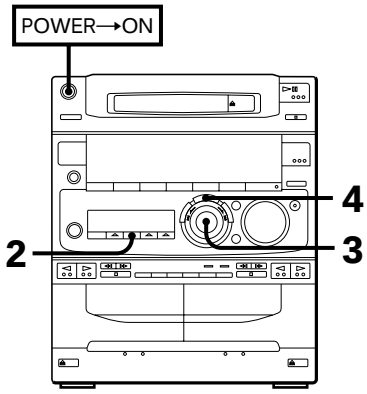

1 Tune in a station you want to store in the preset memory.

2 Press TUNER MEMORY.
"MEMORY" and the preset channel number appear in the display.

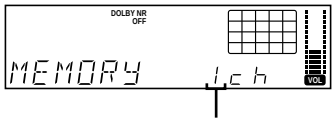

Preset channel number

3 Turn the jog dial to select a preset channel number.

4 Press ENTER / NEXT.
The station is stored at the preset channel number you have decided on.

5 Repeat steps 1 to 4 for each station you want to store.

To erase a stored station

Store a new station at a previously used preset channel number. It will erase the old station and replace it with the new station.

If you have trouble storing a station or if you made a mistake

Make sure "MEMORY" is lit in the display. If not, press TUNER MEMORY again so that "MEMORY" appears (for about eight seconds) in the display, and then proceed with steps 3 and 4.

Playing Preset Radio Stations

Once you have preset the stations, use the jog dial to quickly tune in your favourite stations.

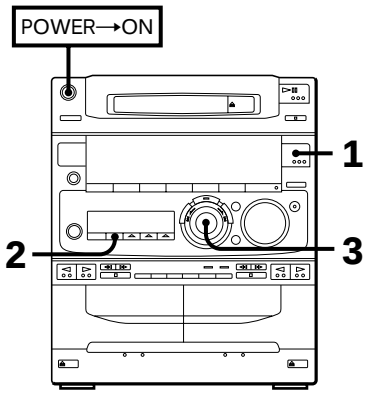

1 Press TUNER / BAND repeatedly to select the band you want.

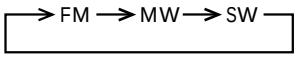

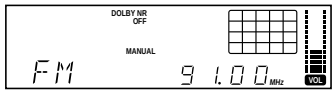

2 Press TUNING MODE so that "PRESET" appears in the display.

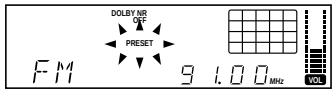

3 Turn the jog dial (or press ⏮ or ⏭ on the remote) to tune in a preset station.
The station frequency appears and the system begins receiving the stations.

Chapter 4: the Tape Player

Playing a Tape

Recording a CD

Recording a CD: Selecting Tape Length Automatically (tape select edit)

Recording a CD: Specifying Tape Length (time edit)

Recording a CD: Specifying Track Order (program edit)

Recording From the Radio

Recording From Another Tape (dubbing)

Playing a Tape

You can use TYPE I (normal), TYPE II (CrO_2) and TYPE IV (metal) tapes. When you insert a tape, the deck detects the tape type automatically.

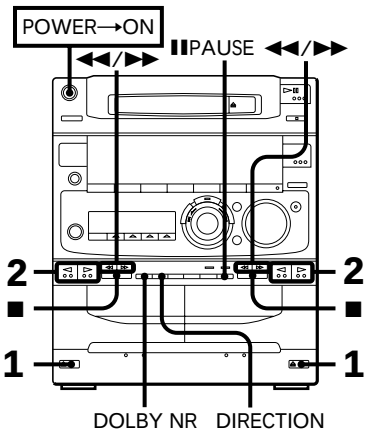

1 Press ⏏ EJECT to open tape compartment.
Insert a recorded tape in deck A or B with the tape side down and the side you want to play facing forward. Push to close the compartment.

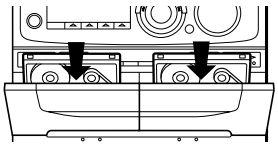

2 Press ▷ (to play the front side) or ◁ (to play the reverse side).
The tape starts playing.

To play	Press DIRECTION to select
One side of the tape	⇄
Both sides*1	⇄
Both decks in succession*2	RELAY

*1 The deck stops automatically after repeating the sequence five times.
*2 See "To play both decks in succession (relay play)".

To	Press
Stop play	■ (▢ *)
Pause (Deck B only)	❚❚ PAUSE (▥ *)
Resume play after pause (Deck B only)	❚❚ PAUSE (▥ *), ◁ or ▷ (DECK A ▷ or DECK B ▷ *)
Fast forward	▶▶ for front side ◀◀ for reverse side
Rewind	◀◀ for front side ▶▶ for reverse side
Remove the cassette	⏏ EJECT

* Remote

To control with the remote

1 Press DECK A ▷ or DECK B ▷ to play the front side and press DECK A ▷ or DECK B ▷ again to play the reverse side.
2 Press the desired operation button.

To play both decks in succession (relay play)

Relay play always follows the following sequence. When the reverse side of the tape in deck B finishes playing, the following sequence continues four more times.

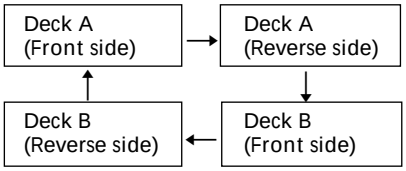

1 Press ⏏ EJECT and insert recorded tapes in both decks.
2 Press DIRECTION repeatedly until "RELAY" appears in the display.
3 Press ◁ or ▷ on either deck.
To stop relay play, press ■.

To cancel relay play

Press DIRECTION repeatedly until "⇄" or "⇄" appears in the display.

When listening to a tape recorded with the Dolby B-type noise reduction system*

Press DOLBY NR button so that "DOLBY NR B" appears in the display.
The setting affects both decks. Dolby noise reduction system reduces tape hiss noise in low-level high-frequency signals.

* Dolby noise reduction manufactured under license from Dolby Laboratories Licensing Corporation.
"DOLBY" and the double-D symbol D are trademarks of Dolby Laboratories Licensing Corporation.

One Touch Play feature

Press ▷ or ◁ when the power is off.
You can listen to the tape without pressing any other buttons when a tape is in the deck. When a tape is not in the deck, the system will just turn on.

Automatic Source Selection

If you press ▷ or ◁ (or DECK A ▷ or DECK B ▷ on the remote) while you are listening to other sound source, the tape deck is selected and the play starts automatically.

Recording a CD

You can record from a CD to a tape.
Use TYPE I (normal) or TYPE II (CrO_2) tapes. Do not use TYPE IV (metal) tapes for recording.
To listen to other sources while recording, you must stop recording.

Recording a CD Automatically

By using CD SYNCHRO, you can record from a CD to a tape quickly.
Use the buttons on the unit to do this operation.

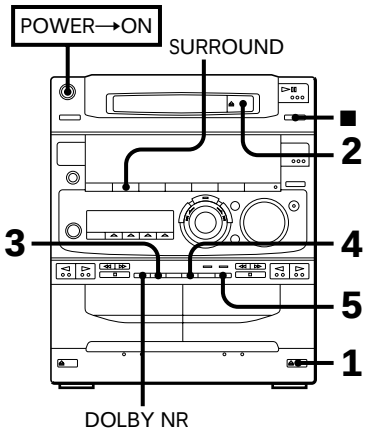

1 Press ⏏ EJECT and insert a blank tape into deck B with the side you want to record on facing forward.
Recording will start from the front side of the tape, unless you have changed the playing direction before recording.
Make sure the tabs on the cassette have not been removed.

2 Press ⏏ OPEN / CLOSE and place a CD. Then, press ⏏ OPEN / CLOSE again to close the disc tray.

3 Select dual or single-sided recording.

To record	Press DIRECTION to select
One side of the tape	⇄
Both sides*	⇄ or RELAY

* Recording always stops at the end of the reverse side. Be sure to start from the front side.

4 Press CD SYNCHRO.
Deck B stands by for recording.

5 Press ❚❚ PAUSE to release recording pause.
Recording starts.
After about 10 seconds, the CD starts playing.

To stop recording
Press ■ on deck B or the CD player.

To add the surround effect
Press SURROUND so that "SUR ▮▮▮■▮▮▮" appears in the display.
You can record the sound with surround effect.
The equalizer you adjusted will no be recorded.

To activate DOLBY NR
When you want to reduce the hiss noise in low-level high-frequency signals, press DOLBY NR so that "DOLBY NR B" appears in the display after step 3.

Recording a CD Manually

You can record a CD as you like, for instance, record just the songs you want or record from the middle of the tape.

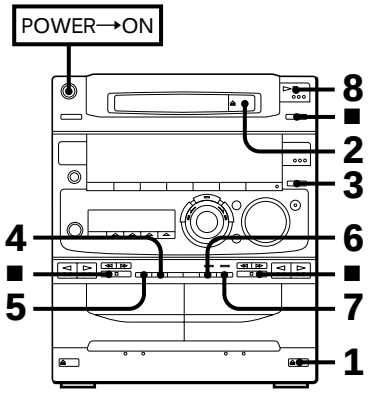

1 Press ⏏ EJECT and insert a blank tape into deck B with the side you want to record on facing forward.
Recording will start from the front side of the tape, unless you have changed the playing direction before recording.
Make sure the tabs on the cassette have not been removed.

2 Press ⏏ OPEN / CLOSE and place a CD. Then, press ⏏ OPEN / CLOSE again to close the disc tray.

3 Press FUNCTION repeatedly until "CD" appears in the display.

4 Select dual or single-sided recording.

To record	Press DIRECTION to select
One side of the tape	⇄
Both sides*	⇄ or RELAY

* Recording always stops at the end of the reverse side. Be sure to start from the front side.

5 When you want to reduce the hiss noise in low-level high-frequency signals, press DOLBY NR so that "DOLBY NR B" appears in the display.

6 Press ● REC.
Deck B stands by for recording.

7 Press ❚❚ PAUSE to release recording pause.
Recording starts.

8 Press ▷❚❚ on the CD player.
The CD starts playing.

To	Press
Stop recording	■ on deck B
Pause recording	❚❚ PAUSE
Stop CD play	■ on the CD player
Pause CD play	▷❚❚ on the CD player

Recording a CD: Selecting Tape Length Automatically (tape select edit)

You can have the stereo system select and indicate the most suitable tape length for recording each disc automatically.
You cannot use Tape Select Edit for discs which contain 21 tracks or more.

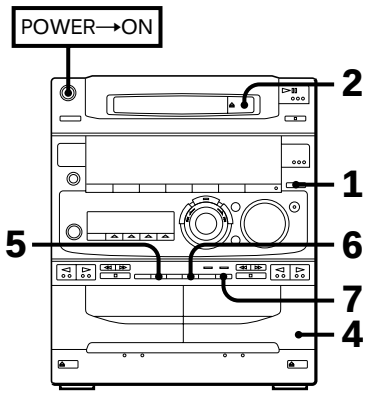

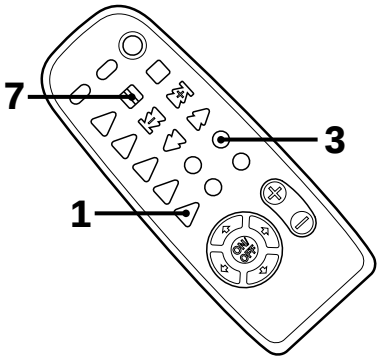

continue to next page →

→ continued

1 Press FUNCTION repeatedly until "CD" appears in the display.

2 Press ⏏ OPEN / CLOSE and place a CD. Then, press ⏏ OPEN / CLOSE again to close the disc tray.

3 Press EDIT on the remote.
"TAPE SELECT" appears and the player divides the selections automatically.
Then the display changes as follows:

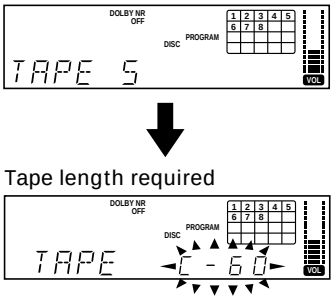

4 Insert a blank tape of the indicated length (or longer) into deck B.

5 Select dual or single-sided recording.

To record	Press DIRECTION to select
One side of the tape	⇄
Both sides*	⇄ or RELAY

* Recording always stops at the end of the reverse side. Be sure to start from the front side.

6 Press CD SYNCHRO.
Deck B stands by for recording.

7 Press ❚❚ PAUSE to release recording pause.
Recording starts.
After about 10 seconds, the CD starts playing.

Recording a CD: Specifying Tape Length (time edit)

You can have the stereo system create programs based on the tape length. The CD player makes programs that will fit the tape length. For example, if you use a 40-minute tape to record a 46-minute CD, the CD player will automatically choose tracks that will fit within the 40-minutes, filling as much of the tape as possible. The player will not program those tracks beyond track number 20. Use the buttons on both the unit and the remote to do this operation.

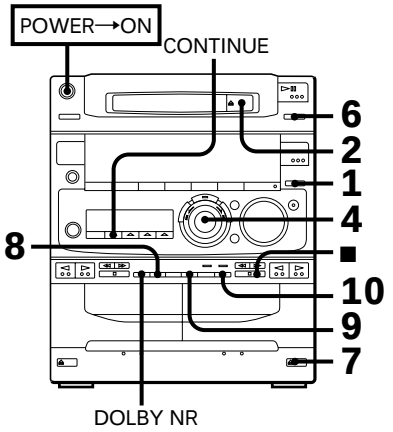

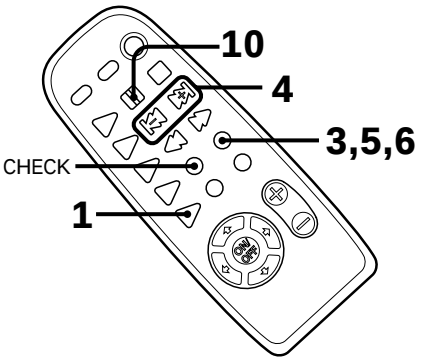

1 Press FUNCTION repeatedly until "CD" appears in the display.

2 Press ⏏ OPEN / CLOSE and place a CD. Then, press ⏏ OPEN / CLOSE again to close the disc tray.

3 Press EDIT twice on the remote.
"TIME EDIT" appears in the display.
Then "SELECT" and "TIME" appear alternately in the display.

4 Turn the jog dial (or press ⏮ or ⏭ on the remote) to designate the tape length.
Choose the indication for tapes of a corresponding minute length. Choose "HALF" if you want the CD player to play just half the total playing time of the CD without changing the order of the track.
As you turn the jog dial or press ⏮ or ⏭ on the remote, the indication changes as follows:

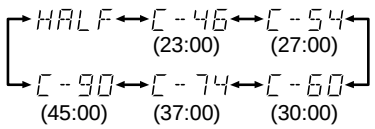

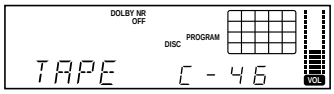

Note
You cannot select "HALF" when you want to record CD which has more than 20 tracks.

5 Press EDIT on the remote.
The CD player determines the tracks to be recorded on side A automatically.

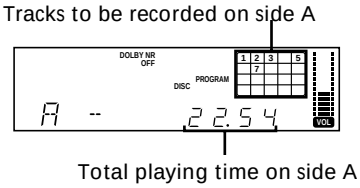

6 When you want to record on both sides, press EDIT on the remote again.
The CD player determines the tracks to be recorded on side B.
When you want to record only on side A, press ■ on the CD player to stop the indication from flashing.

7 Press ⏏ EJECT and insert a blank tape into deck B with the side you want to record on facing forward.
Recording will start from the front side of the tape, unless you have changed the playing direction before recording.
Make sure the tabs on the cassette have not been removed.

8 Select dual or single-sided recording.

To record	Press DIRECTION to select
One side of the tape	⇄
Both sides*	⇄ or RELAY

* Recording always stops at the end of the reverse side. Be sure to start from the front side.

9 Press CD SYNCHRO.
Deck B stands by for recording.

10 Press ❚❚ PAUSE to release recording pause.
Recording starts.
After about 10 seconds, the CD starts playing.

To stop recording
Press ■ on deck B or the CD player.

To check the order
Press CHECK on the remote repeatedly. Each time you press CHECK, the number of the programmed tracks appear in the display.

To cancel time edit
Press ■ on the CD player and then press CONTINUE.

To select the desired tracks beforehand
You can place priority on some tracks to be recorded by selecting them before programming (only up to 20 tracks). See "Playing Tracks in the Desired Order (program play)".

To activate DOLBY NR
When you want to reduce the hiss noise in low-level high-frequency signals, press DOLBY NR so that "DOLBY NR B" appears in the display after step 8.

Recording a CD: Specifying Track Order (program edit)

You can adjust the total recording time to the tape length while making a program. Use the buttons on both the unit and the remote to do this operation.

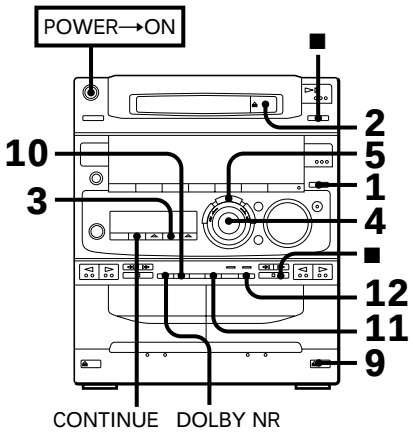

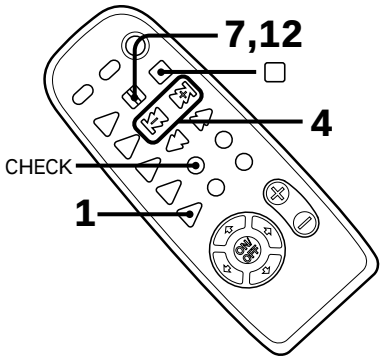

1 Press FUNCTION repeatedly until "CD" appears in the display.

2 Press ⏏ OPEN / CLOSE and place a CD. Then, press ⏏ OPEN / CLOSE again to close the disc tray.

3 Press PROGRAM.
"PROGRAM" appears in the display.

4 Turn the jog dial (or press ⏮ or ⏭ on the remote) to choose a track.

5 Press ENTER / NEXT.
The chosen track number lights up in the music calendar and is memorized. If the track number disappears before you press ENTER / NEXT, go back to step 4.

6 Repeat steps 4 and 5 to program the remaining tracks you want to record on side A in the order you want them to be recorded.

7 Press ⏸ on the remote to pause recording at the end of side A.
"P" appears in the display. The total playing time "0.00" is displayed.

8 Repeat steps 4 and 5 to program the remaining tracks you want to record on side B in the order you want them to be recorded.

9 Press ⏏ EJECT and insert a blank tape into deck B with the side you want to record on facing forward.
Recording will start from the front side of the tape, unless you have changed the playing direction before recording.
Make sure the tabs on the cassette have not been removed.

10 Select dual or single-sided recording.

To record	Press DIRECTION to select
One side of the tape	⇄
Both sides*	⇆ or RELAY

* Recording always stops at the end of the reverse side. Be sure to start from the front side.

11 Press CD SYNCHRO.
Deck B stands by for recording.

12 Press ❚❚ PAUSE to release recording pause.
Recording starts.
After about 10 seconds, the CD starts playing.

To stop recording
Press ■ on deck B or the CD player.

To check the order
Press CHECK on the remote repeatedly. Each time you press CHECK, the number of the programmed tracks appear in the display.

To cancel program edit
Press CONTINUE so that "PROGRAM" disappears from the display.

To activate DOLBY NR
When you want to reduce the hiss noise in low-level high-frequency signals, press DOLBY NR so that "DOLBY NR B" appears in the display after step 10.

Recording From the Radio

You can record from the tuner onto a tape. Use TYPE I (normal) or TYPE II (CrO_2) tape.

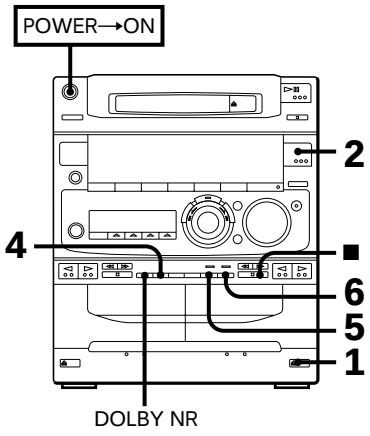

1 Press ⏏ EJECT and insert a blank tape into deck B with the side you want to record on facing forward.
Recording will start from the front side of the tape, unless you have changed the playing direction before recording.
Make sure the tabs on the cassette have not been removed.

2 Press TUNER / BAND several times until the desired radio band appears.

3 Tune in the radio station you want to record. (See "Listening to the Radio", or "Playing Preset Radio Stations" for details.)

4 Select dual or single-sided recording.

To record	Press DIRECTION to select
One side of the tape	⇄
Both sides*	⇆ or RELAY

* Recording always stops at the end of the reverse side. Be sure to start from the front side.

5 Press ● REC.
Deck B stands by for recording.

6 Press ❚❚ PAUSE to release recording pause.
Recording starts.

To stop recording
Press ■ on deck B.

continue to next page →

→ continued

To reduce noise during MW/SW (AM) recording

If a whistling noise is heard while recording, reorient the AM loop antenna for optimum reception.

To activate DOLBY NR

When you want to reduce the hiss noise in low-level high-frequency signals, press DOLBY NR so that "DOLBY NR B" appears in the display after step 4.

Recording From Another Tape (dubbing)

Dubbing Another Tape Automatically

You can record the whole tape onto another automatically by using high speed dubbing. Use the buttons on the unit to do this operation and TYPE I (normal) or TYPE II (CrO_2) tape for dubbing.

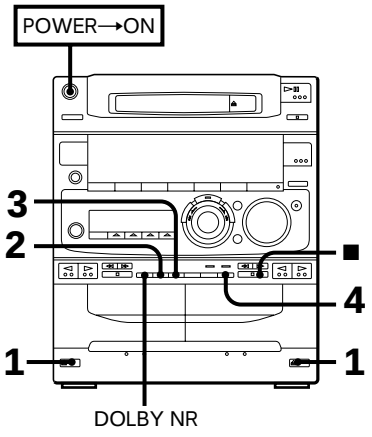

1 Press ⏏ EJECT and insert a recorded tape in deck A with the side you want to play facing forward.
Also, insert a blank tape in deck B with the side you want to record on facing forward.
Recording and playback will start from the front side of the tape, unless you have changed the playing direction before recording.
Make sure the tabs on the cassette have not been removed.

2 Choose how you want the tape to record and press DIRECTION.

Indication	Operation
⇄	Dubbing stops at the end of one side.
↻	When the tape in one deck comes to the end of the front side, it reverses immediately regardless of the tape position in the other deck.
RELAY	When the tape in one deck reaches its end of the front side, it stops until the other tape come to its end, and then both tapes reverse together.

3 Press HIGH SPEED DUBBING.
Deck B stands by for recording.

4 Press ❚❚ PAUSE.
The tape starts dubbing at high speed. When the tape has started dubbing from the reverse side in RELAY and ↻ mode, dubbing will stop at the end of the reverse side.

To stop dubbing

Press ■ on deck B.

You do not have to press DOLBY NR at high speed dubbing

The tape in deck B is automatically recorded in the same state as the tape in deck A.

Dubbing Another Tape Manually

When you want to dub only part of the tape, dub manually at normal speed. Use TYPE I (normal) or TYPE II (CrO_2) tape for recording.

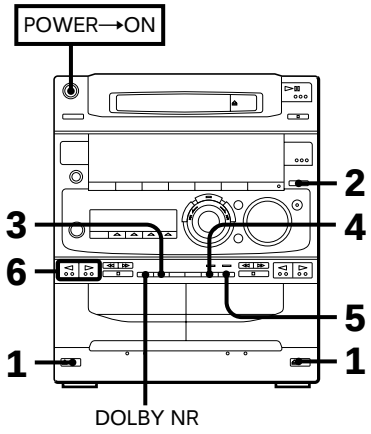

1 Press ⏏ EJECT and insert a recorded tape in deck A with the side you want to play facing forward.
Also, insert a blank tape in deck B with the side you want to record on facing forward.
Recording and playback will start from the front side of the tape, unless you have changed the playing direction before recording.
Make sure the tabs on the cassette have not been removed.

2 Press FUNCTION repeatedly until "TAPE" appears in the display.

3 Select dual or single-sided recording.

To record	Press DIRECTION to select
One side of the tape	⇄
Both sides*	↻ or RELAY

* Recording always stops at the end of the reverse side. Be sure to start from the front side.

4 Press ● REC.
Deck B stands by for recording.

5 Press ❚❚ PAUSE to release recording pause.
Recording starts.

6 Press ▷ or ◁ on deck A to start playback.

To stop recording

Press ■ on deck A and B.

Notes

- When dubbing tapes originally recorded with Dolby NR B, the dubbed tape is automatically recorded with Dolby NR B.
- When you want to record a tape recorded without Dolby NR B onto another tape using Dolby NR B, press DOLBY NR so that "DOLBY NR B" appears in the display before recording.

Chapter 5: Sound Adjustment

Adjusting the Sound

Selecting the Audio Emphasis

Adjusting the Audio Emphasis

Making a Personal Audio Emphasis File (personal file)

Adjusting the Sound

To fully enjoy the sound coming from your stereo system, make the following audio adjustments. See the following sections for additional sound adjustments.

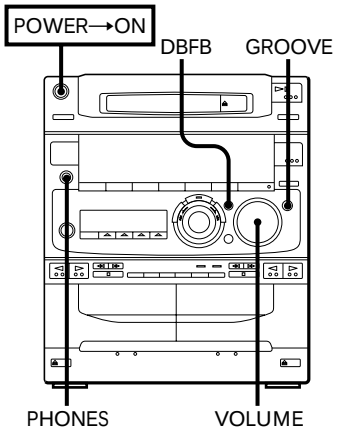

To adjust the volume
Turn VOLUME on the unit or press VOL (+/–) on the remote.

To reinforce bass
Press DBFB* repeatedly until "DBFB ▲\\\ " or "DBFB ▲\\\\\\ " appears in the display. "DBFB ▲\\\\\\ " is more effective than "DBFB ▲\\\ " .

display off → DBFB ▲\\\ → DBFB ▲\\\\\\

* DBFB = Dynamic Bass Feedback

If you use the DBFB System with the graphic equalizer
If the bass is too strong, the music will sound distorted. Adjust the bass slowly while listening to music so that you can monitor the effect of the adjustment.

To get a powerful sound (GROOVE)
Press GROOVE.
The volume switches to power mode, DBFB is automatically set to full strength, the equalizer curve changes, and the "GROOVE" button lights up. Press GROOVE again to return to the previous volume.

Notes
• Cancelling GROOVE does not cancel the DBFB level or equalizer curve.
To cancel the DBFB level, press DBFB repeatedly until "DBFB ▲\\\\\\ " or "DBFB ▲\\\ " disappears from the display. Adjust the equalization to obtain the effect you desire.
• The sound may be distorted with DBFB or GROOVE activated when connecting an optional super woofer (Sony SA-W10, etc.) to the unit.
In this case, set DBFB off and adjust the sound of super woofer.

To listen through the headphones
Connect the headphones to PHONES jack. No sound will come from the speakers.

Selecting The Audio Emphasis

Your stereo system is provided with 15 different preset effects (music menu) created from different graphic equalizer and surround effect settings.
With the press of a single button, you can choose between a variety of effects according to musical genre or use. The personal file function (see page 18) lets you store your own effects.

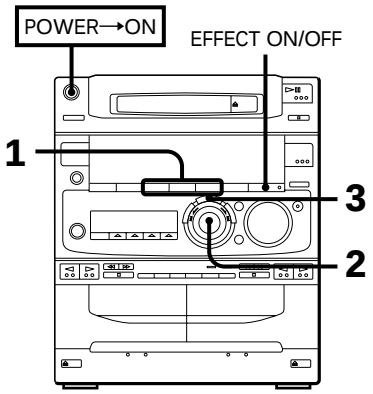

1 Press one of the MENU buttons (or MUSIC MENU ⊘ / ⊘ on the remote) to select MENU.
See the chart "Music menu options" on the following page. The last effect chosen from that menu appears in the display.

2 Use the jog dial (or press MUSIC MENU ◁ / ▷ on the remote repeatedly) to select the preset you desire.
The preset name appears in the display.

3 Press ENTER / NEXT.

To cancel the effect
Press EFFECT ON / OFF (or MUSIC MENU ON / OFF on the remote) so that "EFFECT OFF" appears in the display.

continue to next page →

→ continued

Music menu options
"SUR ||||■|||| " appears if you select an effect with surround effect.

MENU button	Effect	For
MENU 1	ROCK POPS JAZZ CLASSIC DANCE	standard music sources
MENU 2	SALSA REGGAE BALLADE OLDIES SOUL	
MENU 3	MORNING DAY EVENING NIGHT RELAX	listening situations

Adjusting the Audio Emphasis

You can adjust the audio emphasis using the following two functions:
• Graphic Equalizer
• Surround Effect

Adjusting the Sound (graphic equalizer)

You can adjust the sound by raising or lowering the levels of specific frequency ranges.
Before operation, first select the audio emphasis you want for your basic sound.

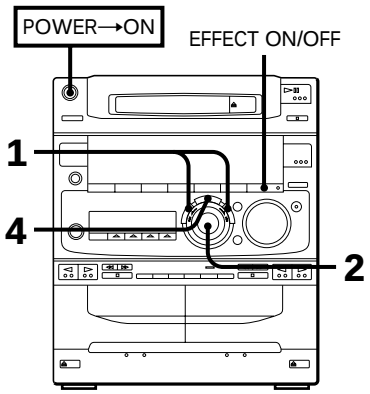

1 Press FREQUENCY + or – to select a frequency band.

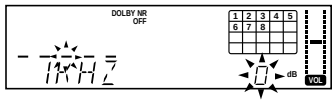

2 Turn the jog dial to adjust level.

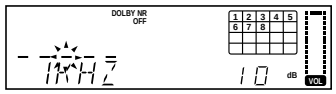

3 Repeat steps 1 and 2.

4 Press ENTER / NEXT when finished.
The equalizer disappears from the display but you can hear the effect of the adjustments.

Note
If you choose another menu audio emphasis (other than "EFFECT OFF") the adjusted sound effect is lost. To retain the adjusted sound effect for future use, store it in a personal file. (See "Making a Personal Audio Emphasis File (personal file)".)

Activating the Sound Field (surround effect)

You can use the surround effect without connecting surround speakers.
Before operation, first select the audio emphasis you want for your basic sound.

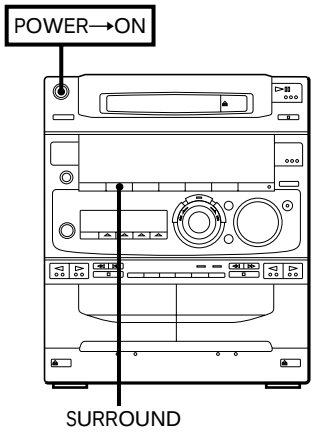

To turn on the surround effect
Press SURROUND.
"SUR ||||■|||| " appears in the display.

To turn off the surround effect
Press SURROUND.
"SUR ||||■|||| " disappears from the display.

Making a Personal Audio Emphasis File (personal file)

You can create a personal file of audio patterns (surround effect and graphic equalizer) and store them in the memory of the unit. Later call up an audio pattern to play a favourite tape, CD, or radio program. Create up to five audio files.
Before operation, first select the audio emphasis you want for your basic sound.

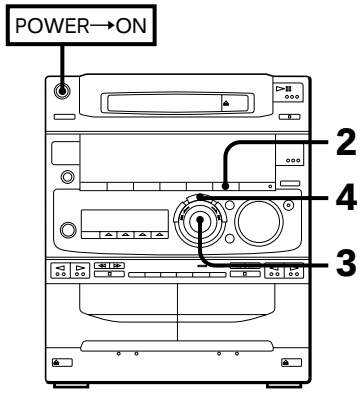

1 Obtain the sound effect you want by using the graphic equalizer and surround effect.

2 Press and hold down P FILE for more than a second.
The personal file number appears in the display.

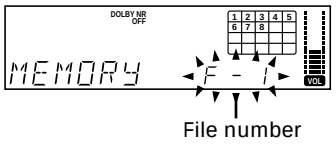

3 Use the jog dial to select the file number (P FILE) where you want to store the sound effect.

4 Press ENTER / NEXT.
The adjusted sound effects are stored under the selected file number. The settings previously stored at this memory location are erased and replaced by the new settings.

To call up the personal file
1 Press P FILE (or MUSIC MENU ◁◁ / ▷▷ on the remote) repeatedly until personal file appears.
The last selected personal file appears in the display.
2 Use the jog dial (or press MUSIC MENU ◁ / ▷ on the remote) to select the personal file you desire.
3 Press ENTER / NEXT.

Chapter 6:

Additional Features

Falling Asleep to Music

Waking up to Music

Timer-Recording Radio Programs

Microphone Mixing

Karaoke: Singing Along

Connecting Optional Equipment

Falling Asleep to Music

You can set the stereo system to turn off automatically so you can go to sleep to music (sleep timer).
You can set the sleep timer even if you have already set the wake-up timer or timer-recording.
Before setting the sleep timer, make sure the clock has been set correctly.

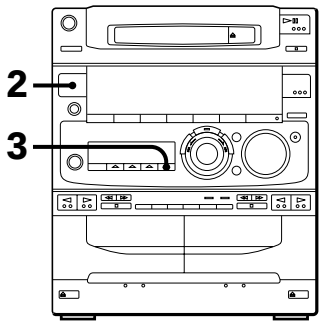

1 Play your favorite sound source (a tape, the tuner or a CD).

2 Press TIMER.

3 Press SLEEP while the source is playing to choose how long you want the music to play.
"SLEEP" and minutes indication appear in the display. As you press SLEEP, the indication decreases by ten minutes from 90 to 10.

The power will turn off after 90 to 10 minutes depending on the length of time you chose.

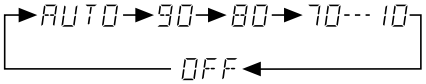

When you choose AUTO
The power turns off when the current CD or tape finishes play back (for up to 100 minutes).
The power turns off, even if you pause the tape or stop playing CD or tape.

To cancel the sleep timer
Press SLEEP on the remote repeatedly until "OFF" appears in the display.

To check the remaining time before the sleep timer turns off the system
Press SLEEP on the remote once.
The remaining time is displayed in minutes for several seconds.

To change the remaining time while the sleep timer is on
Press SLEEP on the remote several times until the desired length of time indication appears.

Note
While the sleep timer is activated, the daily and recording timer functions do not work.

Waking Up to Music

You can wake up to music at the preset time. You only need to set the timer once. Before setting the timer, made sure the clock has been set correctly. The preset timer activates at the same time every day. To wake up to the sound of the radio, be sure to preset the station you want to listen to beforehand. (See "Presetting Radio Stations".)

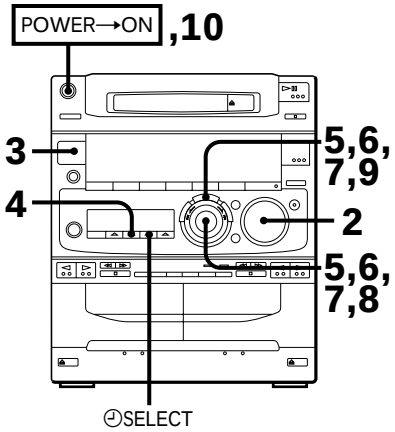

1 Prepare the sound source.

To wake up to the radio
Tune in the preset station you want.

To wake up to a CD
Insert a CD. If you want to play it from a desired track, do the necessary procedures for programmed CD play. (see "Playing Tracks in the Desired Order (program play)".)

To wake up to a tape
Insert the tape with the side you want to play facing forwards you. If you insert the tapes in both decks, you will hear the sound from deck A.

2 Turn VOLUME to adjust the volume. The music will start playing with the adjusted volume when the preset time comes.

3 Press TIMER.

4 Press ◴ SET.

continue to next page →

→ continued

5 Use the jog dial to select either DAILY 1 or 2 and press ENTER / NEXT.
"ON" appears and the hour digits flash in the display.

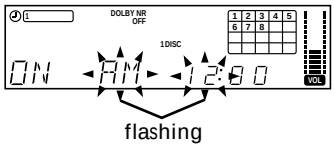

6 Use the jog dial to set the hour you want the system to turn on and press ENTER / NEXT.
Set the minutes in the same way. "OFF" appears and the hour digits flash in the display.

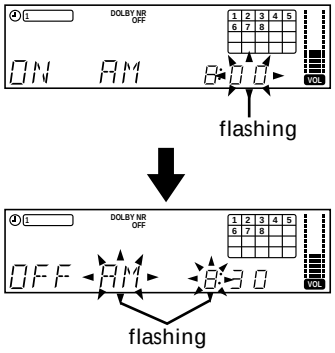

7 Use the jog dial to set the hour you want the system to turn off and press ENTER / NEXT.
Set the minutes in the same way.

8 Use the jog dial to select a sound source.
The display changes as follows:

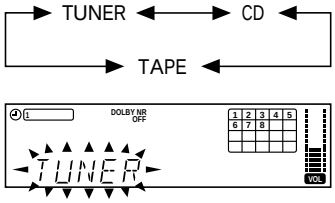

9 Press ENTER / NEXT.
The preset items appear in the display sequentially.

10 Press POWER to turn off the system.
The power will go on at the preset time and the music will play with the volume you have adjusted. At the turn-off time, the power will go off again.

To change the preset timer settings

Start over from step 1.

To check the preset timer settings

1 Press TIMER.
2 Press ◴ SELECT and use the jog dial to choose the mode you want to check.
3 Press ENTER / NEXT.
The preset items appear in the display sequentially, then the original display returns.

To change the timer

Select the timer display you desire in step 2 of "To check the preset timer settings".

To cancel the timer

1 Press TIMER.
2 Press ◴ SELECT and use the jog dial to choose "TIMER OFF."
3 Press ENTER / NEXT.
The next time you want to use the timer, select the timer display you used in step 2 (DAILY 1 or DAILY 2) and press ENTER / NEXT.

Notes

- You cannot set the Timer if the timer ON and OFF times are the same.
- You cannot activate wake-up timer and timer-recording at the same time.

Timer-Recording Radio Programs

You can set the timer to record from the radio at a certain time. This timer works only once for each setting.
Make sure the clock has been set correctly.

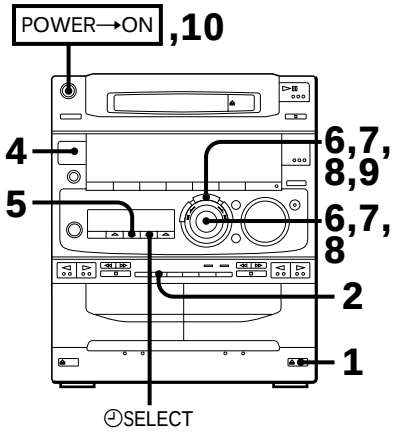

1 Press ⏏ EJECT and insert a blank tape in deck B with the side you want to record on facing forward.

2 Select dual or single-sided recording.

To record	Press DIRECTION to select
One side of the tape	⇄
Both sides*	⇄ or RELAY

* Recording always stops at the end of the reverse side. Be sure to start from the front side.

3 Tune in a station you want to record.

4 Press TIMER.

5 Press ◴ SET.

6 Use the jog dial to select REC and press ENTER / NEXT.
"ON" appears and the hour digits flash in the display.

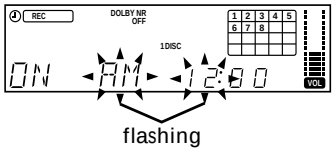

7 Use the jog dial to set the hour you want the system to turn on and press ENTER / NEXT.
Set the minutes in the same way. "OFF" appears and the hour digits flash in the display.

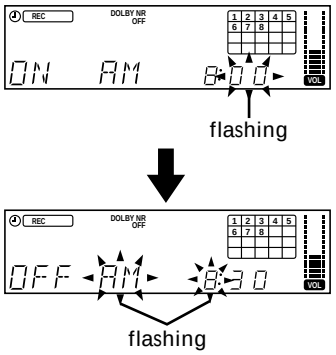

8 Use the jog dial to set the hour you want the system to turn off and press ENTER / NEXT.
Set the minutes in the same way.

9 Press ENTER / NEXT.
The preset items appear in the display sequentially.

10 Press POWER to turn off the system.
The power will go on 15 seconds before the preset time and the volume level is automatically set to the minimum.

To check the preset times settings

1 Press TIMER.
2 Press ◴ SELECT and use the jog dial to select "REC".
3 Press ENTER / NEXT.
The preset items appear in the display sequentially, then the original display returns.

To change the preset timer settings

Start over from step 1.

To cancel the timer

1 Press TIMER.
2 Press ◴ SELECT and use the jog dial to choose "TIMER OFF."
3 Press ENTER / NEXT.
The timer indicators disappear from the display.

If the power is on at the preset time

The sound source will automatically change to the tuner, but tuner recording will not start.

Notes

- You cannot set the timer if the timer ON and OFF times are the same.
- You cannot activate wake-up timer and timer-recording at the same time.

Microphone Mixing

You can "mix" sounds by playing one of the components and singing or speaking into a microphone (not supplied). The mixed sounds can then be recorded on a tape.

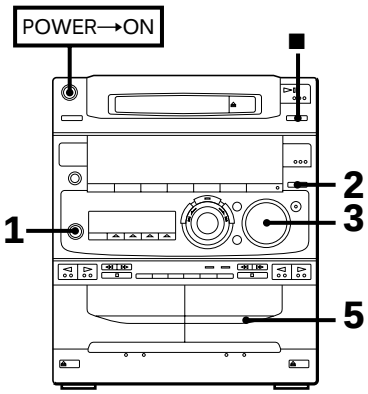

1 Connect a microphone at the MIX MIC jack.

2 Press FUNCTION several times to select a sound source and play it.

3 Adjust VOLUME.
If you hear acoustic feedback, move the microphone away from the speakers or change the direction of the microphone.

4 Sing or speak into the microphone.

5 If you want to record mixed sound, insert a tape in deck B and start recording.

To record from the microphone only

1 Press FUNCTION repeatedly until "CD" appears in the display. If a CD is being played, press ■ on the CD player to stop playing.
2 Start recording.
3 Sing or speak into the microphone.

When you finish mixing

Disconnect the microphone.

Karaoke: Singing Along

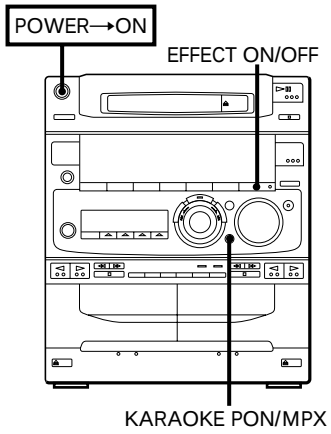

To Reduce the Vocals (Karaoke pon)

You can minimize the singer's voice, "vocal reduction," so you can sing along with any stereo CD or tape. When you want to record the sound of the CD or tape and your voice, operate as shown in the steps below.

To reduce the vocals

Press KARAOKE PON / MPX so that "🔧 PON" appears in the display.
To cancel vocal reduction, press KARAOKE PON / MPX repeatedly so that "🔧 PON", "🔧 MPX R" or "🔧 MPX L" disappear from the display.

If you press EFFECT ON/OFF or recall a sound effect with the MENU buttons

The karaoke mode is cancelled.

Notes on vocal reduction

The singer's voice may not be reduced completely for the following reasons:

- Monaural recorded source (Instruments may also be reduced.).
- Only a few instruments are playing in the stereo recorded source.
- A duet is being played.
- The source has strong echoes or chorus.
- The singer's voice on the source deviates from the center.
- The voice on the source is singing in high soprano or tenor.

To Sing Along with Multiplex CDs or Tapes

You can sing along using the microphone while playing a multiplex CD or tape.

Press KARAOKE PON / MPX repeatedly until "🔧 MPX R" or "🔧 MPX L" appears in the display (choose right (R) or left (L) according to the encoding on your MPX software).

You can hear your voice through the microphone and the instruments.

To hear both channels (the instruments and the recorded singer's voice)

Press KARAOKE PON / MPX repeatedly so that "🔧 PON", "🔧 MPX R" or "🔧 MPX L" disappear from the display.

If you press EFFECT ON/OFF or recall a sound effect with the MENU buttons

The karaoke mode is cancelled.

Connecting Optional Equipment

For greater enjoyment of your stereo system, you can connect other components to the stereo. You can connect:

- an MD player
- a super woofer
- a turntable
- an MD recorder

Connecting an MD player

You can connect an MD player and hear the sound through the connected speakers.

rear panel

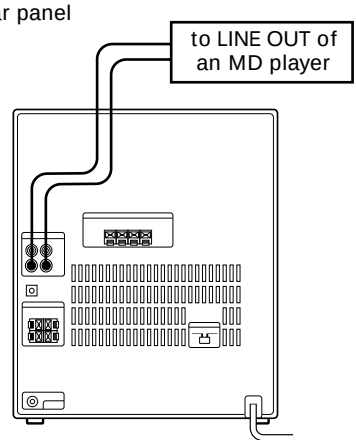

Connect	With
LINE OUT jacks of the MD player	MD IN jacks

Press FUNCTION repeatedly to select MD.

Connecting a Super Woofer

You can connect a super woofer to SUPER WOOFER jack.

rear panel

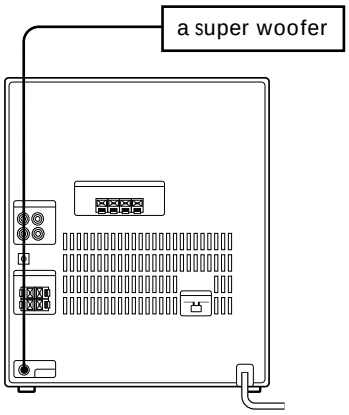

Connecting a Turntable

You can connect a turntable to MD IN jacks.
Before you connect, check which type of turntable you have.

rear panel

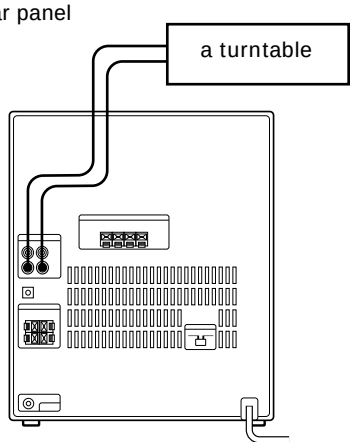

Is the turntable supplied with a phono equalizer?	Connect with
Yes	MD IN jacks
No	MD IN jacks using a MM cartridge equalizer and connecting cable (not supplied)

Press FUNCTION to select MD.

Connecting an MD Recorder

Select one of the following two connections, depending on the equipment to be connected and the method recording.

- an MD recorder for digital recording
- an MD recorder for analog recording

To connect an MD recorder for digital recording
You can record from the CD into the MD recorder digitally.

rear panel

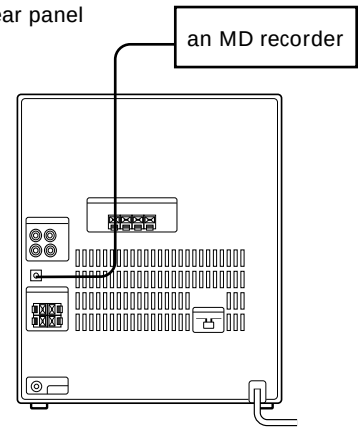

Connect	With
Digital IN jack of the MD recorder	CD DIGITAL OUT OPTICAL using an optical cable

To connect an MD recorder for analog recording
You can record from the sound sources of the stereo into the MD recorder in analog sound.
You can also listen to the sound from the MD recorder by pressing FUNCTION repeatedly to select MD.

rear panel

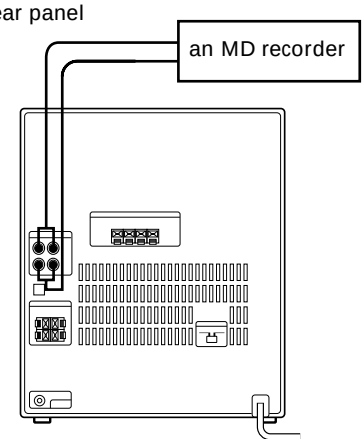

Connect	With
LINE IN jack of the MD recorder	MD OUT jacks
LINE OUT jack of the MD recorder	MD IN jacks

Use audio cords and make sure to connect the plugs to jacks of the same colour.
Then press FUNCTION to select the sound source.

For Your Information

Precautions

Troubleshooting Guide

Maintenance

Specifications

Index to Parts and Controls

Index

Precautions

If you have any questions or problems concerning your stereo system, please consult your nearest Sony dealer.

On safety

- The unit is not disconnected from the AC power source (mains) as long as it is connected to the wall outlet, even if the unit itself has been turned off.
- Unplug the system from the AC power outlet if it is not to be used for an extended period of time. To disconnect the AC power cord, pull it out by the plug. Never pull the cord itself.
- Should any solid object or liquid fall into the component, unplug the stereo system and have the component checked by qualified personnel before operating it any further.
- AC power cord must be changed only at the qualified service shop.

On installation

Place the stereo system in a location with adequate ventilation to prevent heat build-up in the stereo system.

- Do not place the unit in an inclined position.
- Do not place the unit in locations where it is:
  - Extremely hot or cold
  - Dusty or dirty
  - Very humid
  - Vibrating
  - Subject to direct sunlight

On condensation in the CD player component

If the system is brought directly from a cold to a warm location, or is placed in a very damp room, moisture may condense on the lens inside the CD player. Should this occur, the CD player will not operate. Remove the CD and leave the system turned on for about an hour until the moisture evaporates.

To save a tape permanently

To prevent a tape from being accidentally recorded over, break off the cassette tab from side A or B as illustrated. If you later want to reuse the tape for recording, cover the broken tab with adhesive tape.

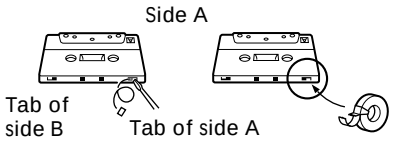

When you are using a TYPE II (CrO_2) or TYPE IV (metal) cassette, be careful not to cover the detector slots which allow the tape player to automatically detect the type of tape.

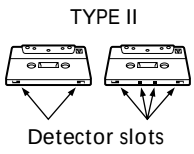

Troubleshooting Guide

If you run into any problem using this stereo system, use the following check list. And first check the following points:

- The power cord is connected firmly.
- The speakers are connected correctly and firmly.

Should any problem persist after you have made the checks below, consult your nearest Sony dealer.

Tuner

"TUNED" flashes in the display.

→ Adjust the antenna.

"STEREO" flashes in the display.

→ Adjust the antenna.

Severe hum or noise.

→ Adjust the antenna.
→ The signal strength is too weak. Connect the external antenna.
→ Connect the ground wire.

A stereo FM program cannot be received in stereo.

→ Press STEREO so that "STEREO" appears.

Tape Player

The tape does not record.

→ No tape in the cassette holder.
→ The tab has been removed from the cassette.
→ The tape has reeled to the end.

The tape does not record or playback or there is a decrease in sound level.

→ The heads are dirty. Clean them.*
→ Magnetic deposits have built-up on the record / playback heads.*

There is excessive wow or flutter, or the sound drops out.

→ The capstans or pinch rollers are contaminated.*

The tape does not erase completely.

→ Magnetic deposits have built-up on the record / playback heads.*

Noise increases or the high frequencies are erased.

→ Magnetic deposits have built-up on the record / playback heads.*

* See "Maintenance."

CD Player

The disc tray does not close.
→ The CD is not placed correctly.

The CD will not play.
→ The CD is dirty.
→ The CD is inserted label side down.
→ The player is in pause mode.
→ Moisture condensation has built up.
Leave the system turned on for about an hour until the moisture evaporates.

"CD no dISC" is displayed.
→ There is no CD in the player.

Play does not start from the first track.
→ The player is in program or shuffle mode. Press CONTINUE so that "PROGRAM" or "SHUFFLE" goes out.

General

The sound from an optional super woofer (Sony SA-W10, etc.) is distorted.
→ Set DBFB off.
→ Adjust the sound of a super woofer.

There is no sound.
→ Rotate VOLUME clockwise.
→ The headphones are connected. Disconnect them.

Sound comes from one channel or unbalanced left and right volume.
→ Check the speaker connections of the inoperative channel.

The left and right sound are reversed.
→ Check the speaker connection and speaker placement.

Bass is lacking or the location of the musical instruments is apparently imprecise.
→ Check the speaker connection for proper phasing.

There is severe hum or noise.
→ A TV or VCR is too close to the stereo system. Move the stereo system away from the TV or VCR.

"12:00 AM" flashes in the display.
→ A power interruption occurred. Set the clock again.

The remote does not function.
→ The batteries have run down. Replace both batteries.
→ There is an obstacle between the remote and the system. Remove the obstacle.

Restoring the factory Settings

Hold down DISPLAY/DEMO, TUNER/BAND and MENU 3 at the same time.

Maintenance

To clean the tape heads and tape path
Contaminated tape heads cause poor recording or sound drop-out in playback. We recommend cleaning after every 10 hours of operation.

Open the tape compartment and wipe the heads, the pinch rollers and the capstans with a cleaning swab slightly moistened with cleaning fluid or alcohol. Wipe the parts shown below:

Deck A

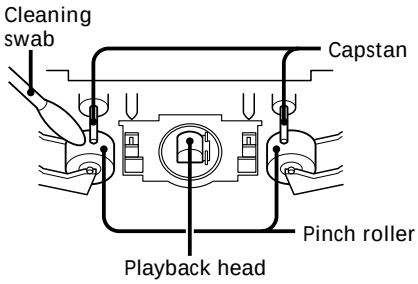

Deck B

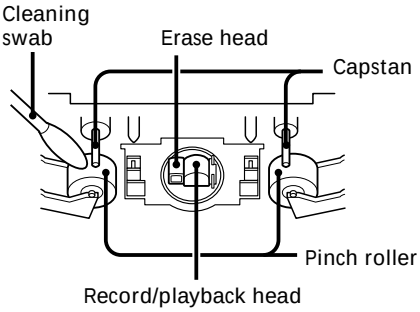

Insert a tape when the areas cleaned are completely dry.

To demagnetize the tape heads
After 20 to 30 hours of use, enough residual magnetism will have built up on the heads to begin to cause loss of high frequencies and hiss. At this time, demagnetize the heads and all metal parts in the tape path with a commercially available tape head demagnetizer. Refer to the instructions of the demagnetizer.

To clean the cabinet
Use a soft cloth slightly moistened with mild detergent solution.

To clean the CD
When a CD is dirty, clean it with a cleaning cloth. Wipe the CD from the center out.

Notes on CD
- Do not use solvents such as benzene, thinner, commercially available cleaners, or antistatic spray intended for vinyl LPs.
- If there is a scratch, dirt or fingerprints on the CD, it may cause a tracking error.

Specifications

CD player section

System: Compact disc and digital audio system
Laser: Semiconductor
Laser output: Max. 44.6 μW*
*This output is the value measured at a distance of 200 mm from the objective lens surface on the Optical Pick-up Block with 7 mm aperture.
Wavelength: 780 – 790 nm
Frequency response: 2 Hz – 20 kHz (±0.5 dB)
Signal-to-noise ratio: More than 90 dB
Dynamic range: More than 90 dB
CD DIGITAL OPTICAL OUTPUT (Square optical connector jack, rear panel)
Wavelength: 600 nm
Output level: –18 dBm

Tuner section

FM stereo, FM / AM superheterodyne tuner

FM tuner section

Tuning range: 87.5 – 108.0 MHz
Antenna: FM lead antenna
Antenna terminals: 75 ohm unbalanced
Intermediate frequency: 10.7 MHz

AM tuner section

Tuning range:
MW: 531 – 1,602 kHz (with the interval set at 9 kHz)
530 – 1,710 kHz (with the interval set at 10 kHz)
SW: 5.95 – 17.90 MHz
Antenna: AM loop antenna, External antenna terminals
Intermediate frequency: 450 kHz

Amplifier section

Peak music power output: 800 W
Continuous RMS power output: 50 W + 50 W (6 ohms at 1 kHz, 5% THD)

Inputs
MIX MIC (phone jacks): sensitivity 1 mV, impedance 10 kilohms
MD IN: Audio (Phono Jacks) Voltage 450 mV Impedance 47 kilohms
Outputs
PHONES (stereo phone jack): accepts headphones of 8 ohms or more.
SPEAKER: accepts impedance of 6 to 16 ohms.
SUPER WOOFER: Voltage 1 V, impedance 1 kilohms
MD OUT: Audio (Phono Jacks) Voltage 450 mV Impedance 1 kilohms

Tape player section

Recording system: 4-track 2-channel stereo
Frequency response: (DOLBY NR OFF)
40 – 13,000 Hz (±3 dB), using Sony TYPE I cassette
40 – 14,000 Hz (±3 dB), using Sony TYPE II cassette
Wow and flutter: ±0.15% W.Peak (IEC)
0.1% W.RMS (NAB)
±0.2% W.Peak (DIN)

Speaker

SS-L50H

Speaker system: 2-way speaker system
Speaker units: Woofer: 15 cm cone type; Tweeter: 5 cm cone type
Enclosure type: Bass reflex
Rated impedance: 6 ohms
Dimensions: Approx. 205 × 330 × 311 mm (8 1/8 × 13 × 12 1/4 in) (w / h / d)
Mass: Approx. 3.9 kg (8 lb 3 oz) per speaker

Supplied accessories

AM loop antenna (1)
Remote RM-SD50 (1)
Sony SUM-3 (NS) batteries (2)
FM lead antenna (1)

General

Power requirements: 110-120 V or 220-240 V AC, 50 / 60 Hz
Adjustable with the voltage selector
Power consumption: 95 W
Dimensions: Approx. 280 × 330 × 360 mm (11 1/8 × 13 × 14 1/4 in) (w / h / d) incl. projecting parts and controls
Mass: Approx. 7.5 kg (16 lb 9 oz)

Design and specifications are subject to change without notice.

Index to Parts and Controls

Refer to the pages indicated in parentheses for details on how to use the controls. Controls with an asterisk have indicators on themselves.

Front Panel

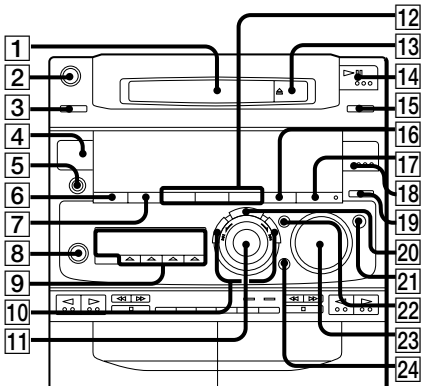

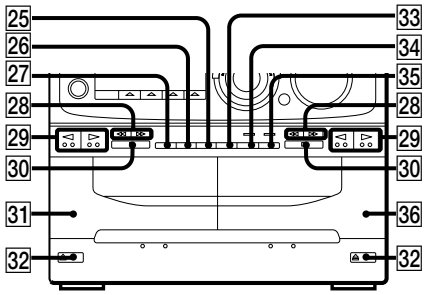

1 Disc tray (7)
2 POWER switch (7)
3 LOOP button (10)
4 TIMER button (19)
5 PHONES jack (17)
6 DISPLAY button (6)
7 SURROUND button (18)
8 MIX MIC jack (21)
9 MULTI FUNCTION CONTROL buttons (26)
10 FREQUENCY + / – buttons (18)
11 Jog dial (7)
12 MENU 1 – 3 button (17)
13 ⏏ OPEN / CLOSE button (7)
14 ▷II (play / pause) button* (7)
15 ■ (stop) button (7)
16 P FILE button (18)
17 EFFECT ON / OFF button* (17)
18 TUNER / BAND button* (10)
19 FUNCTION button (8)
20 ENTER / NEXT button (8)
21 GROOVE button (17)
22 DBFB button (17)
23 VOLUME control (17)
24 KARAOKE PON / MPX button (21)
25 HIGH SPEED DUBBING button (16)
26 DIRECTION button (12)
27 DOLBY NR button (12)
28 ◀◀ / ▶▶ (rewind / fast forward) button (12)
29 ◁ / ▷ (reverse side play / front side play) button* (12)
30 ■ (stop) button (12)
31 Deck A (12)
32 ⏏ EJECT button (12)
33 CD SYNCHRO button (13)
34 ● REC button* (13)
35 II PAUSE button* (12)
36 Deck B (12)

MULTI FUNCTION CONTROL buttons

The buttons you can operate the CD player, tuner and the timer light up.

CD player

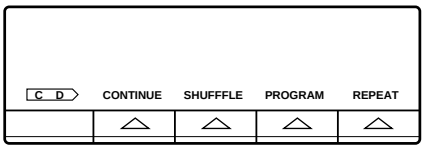

Tuner

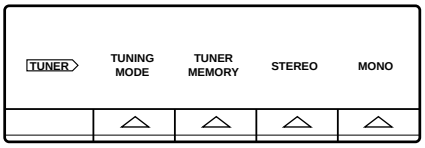

Timer

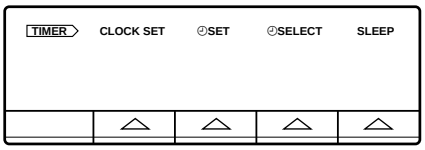

Rear panel

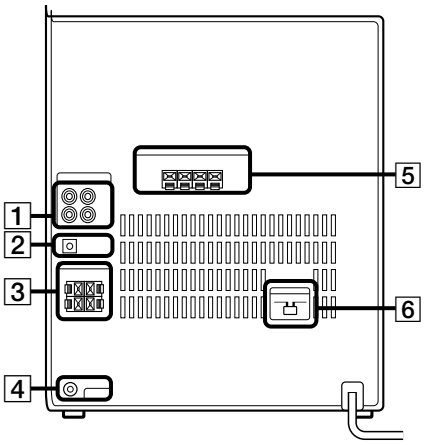

1 MD OUT / IN jacks (22)
2 CD DIGITAL OUT OPTICAL jack (22)
3 SPEAKER L / R connectors (4)
4 SUPER WOOFER jack (22)
5 ANTENNA terminals (4)
6 Voltage selector (except for Malaysian and Singapore models) (5)

Display Window

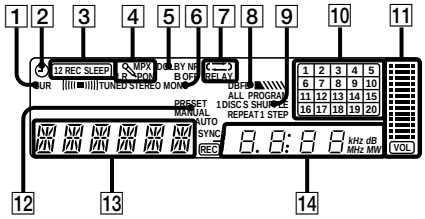

1 SUR indicators (18)
2 ◴ indicator (19)
3 Timer indicators (19)
4 Karaoke PON / MPX indicators (21)
5 DOLBY NR indicator (12)
6 Tuning indicator (10)
7 Direction mode indicators (12)
8 DBFB indicator (17)
9 CD playback indicators (7)
10 Music calendar (7)
11 VOLUME indicators
12 Tuner indicators (10)
13 Multi display
14 Radio frequency / playing time / sound frequency level indications

Remote

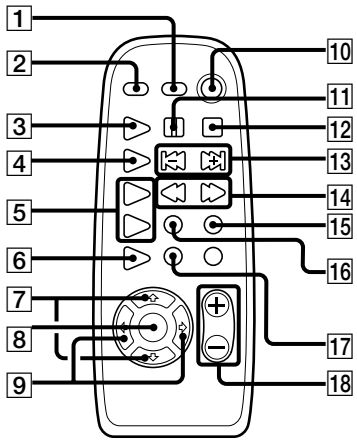

1 SLEEP button (19)
2 LOOP button (9)
3 CD ▷ button (7)
4 TUNER/BAND button (10)
5 DECK A ▷ /DECK B ▷ button (12)
6 FUNCTION button (8)
7 ◁◁ / ▷▷ button (17, 18)
8 MUSIC MENU ON/OFF button (17)
9 ⏮ / ⏭ button (17, 18)
10 POWER switch (7)
11 ⏸ (pause) button (7)
12 ■ (stop) button (7)
13 ⏮ / ⏭ AMS* buttons (7)
14 ◁◁ / ▷▷ (rewind/fast forward) button (7)
15 EDIT button (13)
16 CHECK button (8)
17 CLEAR button (8)
18 VOL (+/–) button (17)

* AMS=Auto Music Sensor

Index

Adjusting
  the audio emphasis 18
  the sound 17
  the volume 17
AMS 7
Antennas 4
Batteries 6
CD player 7
CD synchro recording 13
Clock setting 6
Connecting
  optional equipment 22
  the antennas 4
  the power 5
  the speakers 4
  the stereo 4
Dolby NR (noise reduction) 12
Dubbing
  another tape automatically 16
  another tape manually 16
Karaoke 21
Maintenance 24
Microphone mixing 21
Multiplex 21
Music calendar 7
Normal play 7
One touch play 7, 10, 12
Parts identification 26
Playing
  a tape 12
  CDs (normal play) 7
  preset radio stations 11
  tracks in random order (shuffle play) 8
  tracks in the desired order (program play) 8
  tracks repeatedly (repeat play) 9
  tracks: Repeating a specified portion (loop play) 9
Precautions 23
Program play 8
Radio stations
  presetting 11
  tuning in 10
Recording
  a CD (program edit) 15
  a CD (time edit) 14
  a CD automatically 13
  a CD manually 13
  a radio 15
  another tape (dubbing) 16
  timer recording 20
Relay play 12
Repeat play 9
Restoring the factory settings 24
Saving a recording 23
Shuffle play 8
Sound adjusting 17
Speakers 4
Specifications 25
Supplied accessories 25
Tape player 12
Timer
  falling asleep to music 19
  timer recording 20
  waking up to music 19
Troubleshooting guide 23
Tuner 10

Sony Corporation Printed in Malaysia